Predictive Visual Feedback Control with Eye-in/to-Hand Configuration via Stabilizing Receding Horizon Approach

Toshiyuki Murao * **Hiroyuki Kawai** ** **Masayuki Fujita** ***

* *School of Industrial Technology, Advanced Institute of Industrial Technology, Tokyo, Japan (e-mail: murao-toshiyuki@aiit.ac.jp).*
** *College of Engineering, Kanazawa Institute of Technology, Ishikawa, Japan (e-mail: hiroyuki@neptune.kanazawa-it.ac.jp).*
*** *Graduate School of Science and Engineering, Tokyo Institute of Technology, Tokyo, Japan (e-mail: fujita@ctrl.titech.ac.jp).*

Abstract: This paper investigates vision based robot control via a receding horizon control strategy for an eye-in/to-hand system, as a predictive visual feedback control. Firstly, the dynamic visual feedback system with the eye-in/to-hand configuration is reconstructed in order to improve the performance of the estimation. Next, a stabilizing receding horizon control for the 3D dynamic visual feedback system, a highly nonlinear and relatively fast system, is proposed. The stability of the receding horizon control scheme is guaranteed by using the terminal cost derived from an energy function of the visual feedback system. Furthermore, simulation results are assessed with respect to the stability and the performance.

1. INTRODUCTION

Robotics and intelligent machines need sensory information to behave autonomously in dynamical environments. Visual information is particularly suited to recognize unknown surroundings. In this sense, vision is one of the highest sensing modalities that currently exist. The combination of mechanical control with visual information, so-called visual feedback control is important when we consider a mechanical system working in dynamical environments (Chaumette and Hutchinson [2006, 2007]).

Classically, there have been two typical configurations to visual servo control: eye-in-hand configuration and eye-to-hand configuration. The first configuration has a camera mounted directly on a robot's end-effector, and the second one has a camera fixed in the workspace. Recently, new camera configurations combined each classical one have been proposed. Flandin et al. [2000] addressed an eye-in-hand and an eye-to-hand cooperation approach that each camera information is partitioned into the positioning task and the orientation one, respectively. In Lippiello et al. [2007], the occlusion problem was tackled by using multi eye-in-hand and eye-to-hand cameras. Although good control approaches for each new visual feedback system are reported in those papers, stability does not addressed and the manipulator dynamics is negligible.

The authors discussed passivity based control in the 3D workspace with an eye-in/to-hand configuration as shown in Fig. 1 (Murao et al. [2005]). This configuration consists of a robot manipulator (a work manipulator) and a camera that is attached to the end-effector of another robot manipulator (a camera manipulator). While the objective of this system is obviously to control the work manipulator, we also control the camera one in order to enlarge the field of view. It should be noted that this system includes

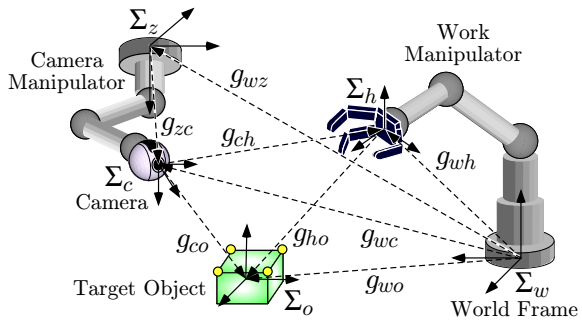

Fig. 1. Eye-in/to-hand visual feedback system.

the both dynamic visual feedback systems with the eye-in-hand configuration and the eye-to-hand one as the special case. However, while it has to be normally treated both the estimation problem and the control one in a typical position based visual feedback control, the control task has negatively affected the estimation one, in Murao et al. [2005]. Moreover, the control law is not based on optimization, the desired control performance cannot be guaranteed explicitly.

Receding horizon control, also recognized as model predictive control is a well-known control strategy in which the current control action is computed by solving, a finite horizon optimal control problem on-line (Mayne et al. [2000]). For the receding horizon control, many researchers have tackled the problem of stability guarantees. On the contrary, for nonlinear and relatively fast systems such as in robotics, few implementations of the receding horizon control have been reported. Jadbabaie et al. [2001] showed that closed-loop stability is ensured through the use of a terminal cost consisting of a control Lyapunov function. Moreover, these results were applied to the Caltech Ducted Fan to perform aggressive maneuvers (Milam et al. [2005]).

Visual feedback, however, is not considered here. Predictive control could be of significant benefit when used in conjunction with visual servoing. With the incorporation of visual information, the system could anticipate the target's future position and be waiting there to intercept it (Hunt and Sanderson [1982]). In Murao et al. [2006], the authors proposed stabilizing receding horizon control for the eye-in-hand visual feedback system. However, this system has been restricted to eye-in-hand systems.

In this paper, as a predictive visual feedback control, a stabilizing receding horizon control is applied to the 3D visual feedback system with the eye-in/to-hand configuration, a highly nonlinear and relatively fast system. Firstly, the dynamic visual feedback system with the eye-in/to-hand configuration is reconstructed in order to improve the performance of the estimation. Next, a stabilizing receding horizon control for the 3D visual feedback system using a control Lyapunov function is proposed. Then, the control performance of the simple passivity based control scheme and the stabilizing receding horizon control scheme is evaluated through simulation results. The proposed formulation generalizes the results presented in the previous papers (Murao et al. [2005]: concerning the eye-in/to-hand configuration) and (Murao et al. [2006]: concerning the predictive visual feedback control).

Throughout this paper, we use the notation $e^{\hat{\xi}\theta_{ab}} \in \mathcal{R}^{3\times 3}$ to represent the change of the principle axes of a frame Σ_b relative to a frame Σ_a. $\xi_{ab} \in \mathcal{R}^3$ specifies the direction of rotation and $\theta_{ab} \in \mathcal{R}$ is the angle of rotation. For simplicity we use $\hat{\xi}\theta_{ab}$ to denote $\hat{\xi}_{ab}\theta_{ab}$. The notation '$\wedge$' (wedge) is the skew-symmetric operator such that $\hat{\xi}\theta = \xi \times \theta$ for the vector cross-product $\times$ and any vector $\theta \in \mathcal{R}^3$. The notation '$\vee$' (vee) denotes the inverse operator to '$\wedge$', i.e., $so(3) \rightarrow \mathcal{R}^3$. Recall that a skew-symmetric matrix corresponds to an axis of rotation (via the mapping $a \mapsto \hat{a}$). We use the 4×4 matrix

$$g_{ab} = \begin{bmatrix} e^{\hat{\xi}\theta_{ab}} & p_{ab} \\ 0 & 1 \end{bmatrix} \tag{1}$$

as the homogeneous representation of $g_{ab} = (p_{ab}, e^{\hat{\xi}\theta_{ab}}) \in SE(3)$ describing the configuration of a frame Σ_b relative to a frame Σ_a. The adjoint transformation associated with g_{ab} is denoted by $\mathrm{Ad}_{(g_{ab})}$ (Murray et al. [1994]).

2. DYNAMIC VISUAL FEEDBACK SYSTEM WITH EYE-IN/TO-HAND CONFIGURATION

This section mainly reviews our previous works (Murao et al. [2005], Fujita et al. [2007]) via the passivity based visual feedback control with the eye-in/to-hand configuration. Additionally, a modified camera control error system and a modified hand one are proposed in order to improve the performance of the estimation from the practical point of view. An energy function and a stabilizing control law, which play an important role for a predictive visual feedback control, are derived.

2.1 Basic Representation for Visual Feedback System and Estimation Error System

The visual feedback system considered in this paper has a robot manipulator and a camera mounted on the another robot's end-effector and as depicted in Fig. 1, where the coordinate frames Σ_w, Σ_h, Σ_z, Σ_c, and Σ_o represent the world frame, the hand (end-effector of the work manipulator) frame, and the base frame of the camera manipulator, the camera (end-effector of the camera manipulator) frame, and the object frame, respectively. Then, the relative rigid body motion from Σ_c to Σ_o can be represented by g_{co}. Similarly, the rigid body motions g_{wc}, g_{wz}, g_{wh} and g_{wo}, and the relative rigid body motions g_{ch}, g_{zc} and g_{ho} are represented, respectively, as shown in Fig. 1.

The objective of visual feedback control is to bring the actual relative rigid body motions g_{co} and g_{ho} to given references g_{cd} and g_{hd}, respectively. The references g_{cd} and g_{hd} are assumed to be constant throughout this paper. We define the camera control error g_{ec} and the hand control error g_{eh} as follows:

$$g_{ec} = g_{cd}^{-1} g_{co}, \tag{2}$$

$$g_{eh} = g_{hd}^{-1} g_{ho}. \tag{3}$$

Using the notation $e_R(e^{\hat{\xi}\theta})$, the vector of the camera control error and the hand control error are given by $e_c := [p_{ec}^T \; e_R^T(e^{\hat{\xi}\theta_{ec}})]^T$ and $e_h := [p_{eh}^T \; e_R^T(e^{\hat{\xi}\theta_{eh}})]^T$, respectively. Note that $e_i = 0$ iff $p_{ei} = 0$ and $e^{\hat{\xi}\theta_{ei}} = I_3$ $(i \in c, h)$.

Firstly, we consider the relative rigid body motion g_{co} in order to achieve the control objective. The relative rigid body motion from Σ_c to Σ_o can be led by using the composition rule for rigid body transformations (Murray et al. [1994], Chap. 2, pp. 37, eq. (2.24)) as follows:

$$g_{co} = g_{wc}^{-1} g_{wo}. \tag{4}$$

The relative rigid body motion involves the velocity of each rigid body. To this aid, let us consider the velocity of a rigid body as described in Murray et al. [1994]. We define the body velocity of the camera relative to the world frame Σ_w as $V_{wc}^b = [v_{wc}^T \; \omega_{wc}^T]^T$, where v_{wc} and ω_{wc} represent the velocity of the origin and the angular velocity from Σ_w to Σ_c, respectively (Murray et al. [1994] Chap. 2, eq. (2.55)).

Differentiating (4) with respect to time, the body velocity of the relative rigid body motion g_{co} can be written as follows (See Fujita et al. [2007]):

$$V_{co}^b = -\mathrm{Ad}_{(g_{co}^{-1})} V_{wc}^b + V_{wo}^b \tag{5}$$

where V_{wo}^b is the body velocity of the target object relative to Σ_w.

The visual feedback control task requires information of the relative rigid body motion g_{co}. Since the measurable information is only the image information $f(g_{co})$ in the visual feedback system, we consider a nonlinear observer in order to estimate the relative rigid body motion g_{co} from the image information $f(g_{co})$.

Firstly, using the basic representation (5), we choose estimates $\bar{g}_{co}$ and $\bar{V}_{co}^b$ of the relative rigid body motion and velocity, respectively as

$$\bar{V}_{co}^b = -\mathrm{Ad}_{(\bar{g}_{co}^{-1})} V_{wc}^b + u_e. \tag{6}$$

The new input u_e is to be determined in order to drive the estimated values $\bar{g}_{co}$ and $\bar{V}_{co}^b$ to their actual values.

In order to establish the estimation error system, we define the estimation error between the estimated value $\bar{g}_{co}$ and the actual relative rigid body motion g_{co} as

$$g_{ee} = \bar{g}_{co}^{-1} g_{co}. \tag{7}$$

Using the notation $e_R(e^{\hat{\xi}\theta})$, the vector of the estimation error is defined as $e_e := [p_{ee}^T \; e_R^T(e^{\hat{\xi}\theta_{ee}})]^T$. Therefore, if the vector of the estimation error is equal to zero, then the estimated relative rigid body motion $\bar{g}_{co}$ equals the actual relative rigid body motion g_{co}.

Suppose the attitude estimation error θ_{ee} is small enough that we can let $e^{\hat{\xi}\theta_{ee}} \simeq I + \mathrm{sk}(e^{\hat{\xi}\theta_{ee}})$. Therefore, using a first-order Taylor expansion approximation, the estimation error vector e_e can be obtained from image information $f(g_{co})$ and the estimated value of the relative rigid body motion $\bar{g}_{co}$ as follows (Fujita et al. [2007]):

$$e_e = J^{\dagger}(\bar{g}_{co})(f - \bar{f}), \tag{8}$$

where $\bar{f}$ is the estimated value of image information. In the same way as the basic representation (5), the estimation error system can be represented by

$$V_{ee}^b = -\mathrm{Ad}_{(g_{ee}^{-1})} u_e + V_{wo}^b. \tag{9}$$

2.2 Camera and Hand Control Error Systems

In this subsection, let us consider the dual of the estimation error system, which we call the control error system, in order to establish the visual feedback system. In previous work (Murao et al. [2005]), we defined the camera control error as $g_{ec} = g_{cd}^{-1}\bar{g}_{co}$, which represent the error between the estimated value $\bar{g}_{co}$ and the reference of the relative rigid body motion g_{cd}. However, the estimation input u_e has affected directly the camera control error system, because the camera control error was defined using the estimated value $\bar{g}_{co}$. This has deteriorated the performance of the estimation. In this paper, we reconstruct the camera control error system using the *new* camera control error $g_{ec} = g_{cd}^{-1} g_{co}$ (2) in order to remove the above negative effect. Thus, we propose the way of deriving g_{ec} (2) from the estimation error vector e_e and the estimated value $\bar{g}_{co}$, not using nonmeasurable value g_{co}.

Using g_{ee}, the camera control error can be transformed as

$$g_{ec} = g_{cd}^{-1} g_{co} = g_{cd}^{-1}\bar{g}_{co}\bar{g}_{co}^{-1} g_{co} = g_{cd}^{-1}\bar{g}_{co} g_{ee}. \tag{10}$$

In Equation (10), g_{cd} and $\bar{g}_{co}$ are known information. While the estimation error vector e_e can be obtained as Equation (8), the estimation error matrix g_{ee} cannot be directly obtained, because g_{ee} is defined using nonmeasurable value g_{co} as Equation (7). Therefore, we consider the way of deriving g_{ee} from e_e.

Because of the definition of the estimation error vector e_e, i.e., $e_e := [p_{ee}^T \; e_R^T(e^{\hat{\xi}\theta_{ee}})]^T$, the position estimation error p_{ee} can be derived directly from e_e. Concerning to the rotation estimation error $e^{\hat{\xi}\theta_{ee}}$, if we assume that the region of the attitude estimation error is $-\frac{\pi}{2} \le \theta_{ee} \le \frac{\pi}{2}$, then $\xi\theta_{ee}$ can be derived as follows:

$$\xi\theta_{ee} = \frac{\sin^{-1}\|e_R(e^{\hat{\xi}\theta_{ee}})\|}{\|e_R(e^{\hat{\xi}\theta_{ee}})\|} e_R(e^{\hat{\xi}\theta_{ee}}). \tag{11}$$

Hence, g_{ee} can be derived from e_e through $\xi\theta_{ee}$ using Equation (1). Here, it should be noted that the assumption $-\frac{\pi}{2} \le \theta_{ee} \le \frac{\pi}{2}$ will not be a new constraint, because we have already set the assumption that the attitude estimation error θ_{ee} is small enough in deriving the estimation error vector e_e (in Subsec.2.1). Therefore, it is possible to derive the *new* camera control error g_{ec} using known information g_{cd}, $\bar{g}_{co}$ and e_e.

In the same way as the estimation error system (9), the camera control error system can be represented as

$$V_{ec}^b = -\mathrm{Ad}_{(g_{ec}^{-1})}\mathrm{Ad}_{(g_{cd}^{-1})} V_{wc}^b + V_{wo}^b. \tag{12}$$

Similar to the camera control error system, we derive the hand control error system, using $g_{eh} = g_{hd}^{-1} g_{ho}$ (3), instead of $g_{eh} = g_{hd}^{-1}\bar{g}_{ho}$ (Murao et al. [2005]). Using g_{ee}, the hand control error can be transformed as

$$g_{eh} = g_{hd}^{-1} g_{ho} = g_{hd}^{-1} g_{ch}^{-1} g_{co} = g_{hd}^{-1} g_{ch}^{-1}\bar{g}_{co} g_{ee}. \tag{13}$$

Here $g_{ch} = g_{wc}^{-1} g_{wz} g_{zh}$ can be obtained directly, because the rigid body motions g_{wc}, g_{zh} and g_{wz} are known by the angles of the manipulators and the structure of the system. According to Equation (13), it is possible to derive the *new* hand control error g_{eh}. Moreover, the hand control error system can be represented as

$$V_{eh}^b = -\mathrm{Ad}_{(g_{eh}^{-1})}\mathrm{Ad}_{(g_{hd}^{-1})} V_{wh}^b + V_{wo}^b, \tag{14}$$

where V_{wh}^b is the body velocity of the hand relative to Σ_w.

2.3 Passivity based Dynamic Visual Feedback System with Eye-in/to-Hand Configuration

The manipulator dynamics of the camera manipulator and the work one (we call the hand one, too) can be written as

$$M_i(q_i)\ddot{q}_i + C_i(q_i, \dot{q}_i)\dot{q}_i + g_i(q_i) = \tau_i + \tau_{id}, \quad i \in c, h \tag{15}$$

where $M_i \in \mathcal{R}^{ni \times ni}$ is the inertia matrix, $C_i \in \mathcal{R}^{ni \times ni}$ is the Coriolis matrix, $g_i \in \mathcal{R}^{ni}$ is the gravity vector, and q_i, $\dot{q}_i$ and $\ddot{q}_i$ are the joint angle, velocity and acceleration, respectively. τ_i is the vector of the input torque, and τ_{id} represents a disturbance input. Here, due to space limitations, the subscripts c and h are used in the case of the camera manipulator and the hand one, respectively. Since the manipulator dynamics is considered, the camera body velocity and the hand one are given by $V_{wc}^b = J_{cb}(q_c)\dot{q}_c$ and $V_{wh}^b = J_{hb}(q_h)\dot{q}_h$, respectively, where $J_{ib}(q_i)$ is the body manipulator Jacobian (Murray et al. [1994]).

Next, we propose the control law for the manipulator as

$$\begin{aligned}\tau_i = {} & M_i(q_i)\ddot{q}_{id} + C_i(q_i, \dot{q}_i)\dot{q}_{id} + g_i(q_i) \\ & + J_{ib}^T(q_i)\mathrm{Ad}_{(g_{id}^{-1})}^T e_i + u_{\xi i}, \quad i \in c, h\end{aligned} \tag{16}$$

where $\dot{q}_{id}$ and $\ddot{q}_{id}$ represent the desired joint velocity and acceleration, respectively. The new input $u_{\xi i}$ is to be determined in order to achieve the control objective.

Let us define the error vectors with respect to the joint velocities of the camera manipulator and the hand one as $\xi_c := \dot{q}_c - \dot{q}_{cd}$ and $\xi_h := \dot{q}_h - \dot{q}_{hd}$, respectively. Moreover, we design the references of the joint velocities as $\dot{q}_{cd} := J_{cb}^{\dagger}(q_c)u_{cd}$ and $\dot{q}_{hd} := J_{hb}^{\dagger}(q_h)u_{hd}$ where u_{id} is the desired body velocity which will be obtained from the visual feedback system. Thus, V_{wc}^b in (12) and V_{wh}^b in (14) should be replaced by u_{cd} and u_{hd}, respectively.

Using (9), (12) and (14)–(16), the eye-in/to-hand visual feedback system with the manipulator dynamics (we call the dynamic visual feedback system) can be derived as follows:

$$
\begin{bmatrix} \dot{\xi}_h \\ \dot{\xi}_c \\ V^b_{eh} \\ V^b_{ec} \\ V^b_{ee} \end{bmatrix} = \begin{bmatrix} -M_h^{-1}C_h\xi_h + M_h^{-1}J_{hb}^T\mathrm{Ad}^T_{(g_{hd}^{-1})}e_h \\ -M_c^{-1}C_c\xi_c + M_c^{-1}J_{cb}^T\mathrm{Ad}^T_{(g_{cd}^{-1})}e_c \\ -\mathrm{Ad}_{(g_{ho}^{-1})}J_{hb}\xi_h \\ -\mathrm{Ad}_{(g_{co}^{-1})}J_{cb}\xi_c \\ 0 \end{bmatrix}
$$

$$
+\begin{bmatrix} M_h^{-1} & 0 & 0 & 0 & 0 \\ 0 & M_c^{-1} & 0 & 0 & 0 \\ 0 & 0 & -\mathrm{Ad}_{(g_{eh}^{-1})} & 0 & 0 \\ 0 & 0 & 0 & -\mathrm{Ad}_{(g_{ec}^{-1})} & 0 \\ 0 & 0 & 0 & 0 & -\mathrm{Ad}_{(g_{ee}^{-1})} \end{bmatrix} u + \begin{bmatrix} M_h^{-1} & 0 & 0 \\ 0 & M_c^{-1} & 0 \\ 0 & 0 & I \\ 0 & 0 & I \\ 0 & 0 & I \end{bmatrix} w \tag{17}
$$

where $u := [u_{\xi h}^T \ u_{\xi c}^T \ (\mathrm{Ad}_{(g_{hd}^{-1})}u_{hd})^T \ (\mathrm{Ad}_{(g_{cd}^{-1})}u_{cd})^T \ u_e^T]^T$. We define the state and the disturbance of the dynamic visual feedback system as $x := [\xi_h^T \ \xi_c^T \ e_h^T \ e_c^T \ e_e^T]^T$ and $w := [\tau_{hd}^T \ \tau_{cd}^T \ (V^b_{wo})^T]^T$, respectively.

Remark 1. If the camera velocity $V^b_{wc} = 0$, the desired camera velocity $u_{cd} = 0$, $g_{wz} = I$, and, the camera control error e_c and the camera manipulator are not considered, then the eye-in/to-hand dynamic visual feedback system (17) represents the eye-to-hand one. On the other hand, if the hand velocity V^b_{wh}, the desired hand velocity u_{hd}, the hand control error e_h and the work manipulator are not considered, then the eye-in/to-hand dynamic visual feedback system (17) represents the eye-in-hand one. Thus, the dynamic visual feedback systems with the eye-in-hand configuration and the eye-to-hand one are regarded as the special cases of the system (17). This is one of main merits of this configuration.

2.4 Energy Function and Stabilizing Control Law

Before constructing the dynamic visual feedback control law, we derive an important lemma.

Lemma 1. If $w = 0$, then the dynamic visual feedback system (17) satisfies $\int_0^T u^T\nu dt \geq -\beta$, $\forall T > 0$ where $\nu := Nx$, $N := \mathrm{diag}\{I, I, -I, -I, -I\}$ and β is a positive scalar.

Due to space limitations, the proof is only sketched. By using the following energy function, the proof can be completed.

$$
V(x) = \frac{1}{2}\xi_h^T M_h(q_h)\xi_h + \frac{1}{2}\xi_c^T M_c(q_c)\xi_c + E(g_{eh}) + E(g_{ec}) + E(g_{ee}), \tag{18}
$$

where $E(g_{ab}) := \frac{1}{2}\|p_{ab}\|^2 + \phi(e^{\hat{\xi}\theta_{ab}})$ and $\phi(e^{\hat{\xi}\theta_{ab}}) := \frac{1}{2}\mathrm{tr}(I - e^{\hat{\xi}\theta_{ab}})$ is the error function of the rotation matrix.

We now propose the following control input for the interconnected system:

$$
u = -K\nu := u_k. \tag{19}
$$

$$
K := \mathrm{diag}\{K_{\xi h}, K_{\xi c}, K_h, K_c, K_e\} > 0
$$

Theorem 2. If $w = 0$, then the equilibrium point $x = 0$ for the closed-loop system (17) and (19) is asymptotic stable.

Proof Differentiating (18) with respect to time yields and using the control input (19), it can be obtained that

$$
\dot{V} = x^T N^T u = -x^T N^T K N x. \tag{20}
$$

This completes the proof. (Q.E.D)

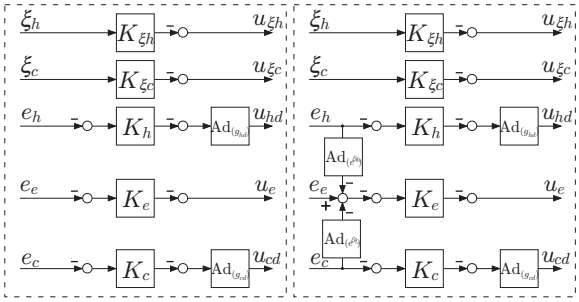

Fig. 2. Block diagram of the control law. (Left: proposed method, Right: previous one (Murao et al. [2005]))

The block diagrams of the control law in the case of the proposed method and the previous one (Murao et al. [2005]) are shown in the left side and the right one of Fig. 2, respectively. In Murao et al. [2005], the camera control error e_c and the hand one e_h have interfered with the control input for the estimation $u_e = K_e(e_e - \mathrm{Ad}^T_{(e^{\hat{\xi}\theta_{eh}})}e_h - \mathrm{Ad}^T_{(e^{\hat{\xi}\theta_{ec}})}e_c)$. In the sequel, the presence of e_c or e_h has negatively affected the estimation of the relative rigid body motion $\bar{g}_{co}$. On the other hand, with the proposed *new* visual feedback control law (19), each feedback input is separated by each error vector, i.e., $u_{\xi h} = -K_{\xi h}\xi_h$, $u_{\xi c} = -K_{\xi c}\xi_c$, $u_{hd} = \mathrm{Ad}_{(g_{hd})}K_h e_h$, $u_{cd} = \mathrm{Ad}_{(g_{cd})}K_c e_c$ and $u_e = K_e e_e$. Thus, the proposed control law can overcome the problem for the above undesirable influence.

3. PREDICTIVE VISUAL FEEDBACK CONTROL

The objective of this section is to propose a predictive visual feedback control based on optimal control theory. A camera can provide more information than the current derivation from a nominal position at the sample instant. This property can be exploited to predict the target's future position and improve the control performance. As a predictive visual feedback control, we propose a stabilizing receding horizon control based on optimization in this paper.

3.1 Control Lyapunov Function

In this section, the finite horizon optimal control problem (FHOCP) for the visual feedback system (17) is considered. The FHOCP for the visual feedback system (17) at time t consists of the minimization with respect to the input $u(\tau, x(\tau)), \tau \in [t, t+T]$, of the following cost function

$$
J(x_0, u, T) = \int_t^{t+T} l(x(\tau), u(\tau))d\tau + F(x(t+T)) \tag{21}
$$

$$
l(x(t), u(t)) = q_{\xi h}(t)\|\xi_h(t)\|^2 + q_{\xi c}(t)\|\xi_c(t)\|^2 + E_{qh}(g_{eh}(t)) + E_{qc}(g_{ec}(t)) + E_{qe}(g_{ee}(t)) + u^T(t)R(t)u(t) \tag{22}
$$

$$
F(x) = \rho V(x) \tag{23}
$$

$$
q_{\xi h}(t) \geq 0, \ q_{\xi c}(t) \geq 0, \ q_{pi}(t) \geq 0, \ q_{Ri}(t) \geq 0, \ \rho > 0,
$$

where $R(t)$ is a positive diagonal matrix, and $E_{qi}(g_{ei}(t)) := q_{pi}(t)\|p_{ei}(t)\|^2 + q_{Ri}(t)\phi(e^{\hat{\xi}\theta_{ei}(t)})$ $(i \in h, c, e)$, with the state $x(t) = x_0$. The speciality of the cost function (21)–(23) is that the terminal cost is derived from an energy function

of the visual feedback system. Furthermore, the rotation error related part of the stage cost is derived from the error function $\phi(e^{\hat{\xi}\theta})$ instead of the commonly used quadratic form $\|e_R(e^{\hat{\xi}\theta})\|^2$. For a given initial condition x_0, we denote this solution of the FHOCP as $u^*(\tau, x(\tau)), \tau \in [t, t+T]$. In receding horizon control, at each sampling time δ, the resulting feedback control at state x_0 is obtained by solving the FHOCP and setting

$$u_{RH} := u^*(\delta, x_0). \tag{24}$$

The following lemma concerning a control Lyapunov function is important to prove a stabilizing receding horizon control. The definition for a control Lyapunov function $S(x)$ is given by

$$\inf_u \left[\dot{S}(x) + l(x,u)\right] \leq 0, \tag{25}$$

where $l(x,u)$ is a positive definite function (Jadbabaie et al. [2001]).

Lemma 3. Suppose that $w = 0$, $\|\theta_{eh}\| \leq \frac{\pi}{2}$, $\|\theta_{ec}\| \leq \frac{\pi}{2}$, $\|\theta_{ee}\| \leq \frac{\pi}{2}$ and the design parameter ρ satisfies

$$\rho^2 I \geq 4QR, \tag{26}$$

where $Q := \mathrm{diag}\{q_{\xi h} I_{nh}, q_{\xi c} I_{nc}, q_{ph} I_3, q_{Rh} I_3, q_{pc} I_3, q_{Rc} I_3, q_{pe} I_3, q_{Re} I_3\}$. Then, the energy function $\rho V(x)$ of the visual feedback system (17) can be regarded as a control Lyapunov function.

Proof Using Equation (20), which is the time derivative of V along the trajectory of the system (17), the positive definite function $l(x(t), u(t))$ (22) and the stabilizing control law u_k (19) with $K = \frac{\rho}{2} R^{-1}$ for the system, Equation (25) can be transformed into

$$\begin{aligned}
&\inf_u [\dot{S}(x) + l(x,u)] \\
&= \inf_u \Bigg[\left(u + \frac{\rho}{2} R^{-1} N x\right)^T R \left(u + \frac{\rho}{2} R^{-1} N x\right) + q_{\xi h} \|\xi_h\|^2 \\
&\quad - \frac{\rho^2}{4} x^T N^T R^{-1} N x + q_{\xi c} \|\xi_c\|^2 + E_{qh}(g_{eh}) + E_{qc}(g_{ec}) + E_{qe}(g_{ee}) \Bigg] \\
&\leq -\frac{\rho^2}{4} x^T R^{-1} x + q_{\xi h} \|\xi_h\|^2 + q_{\xi c} \|\xi_c\|^2 + q_{ph} \|p_{eh}\|^2 \\
&\quad + q_{Reh} \|e_R(e^{\hat{\xi}\theta_{eh}})\|^2 + q_{pc} \|p_{ec}\|^2 + q_{Rec} \|e_R(e^{\hat{\xi}\theta_{ec}})\|^2 \\
&\quad + q_{pe} \|p_{ee}\|^2 + q_{Ree} \|e_R(e^{\hat{\xi}\theta_{ee}})\|^2 \\
&= -x^T \left(\frac{\rho^2}{4} R^{-1} - Q\right) x,
\end{aligned} \tag{27}$$

where we have used the fact that $\phi(e^{\hat{\xi}\theta}) \leq \|e_R(e^{\hat{\xi}\theta})\|^2$ for all $\|\theta\| \leq \frac{\pi}{2}$. Therefore, the condition $\inf_u [\dot{S}(x) + l(x,u)] \leq 0$ will be satisfied, if the assumption $\rho^2 I \geq 4QR$. (Q.E.D)

Lemma 3 shows the energy function $\rho V(x)$ of the visual feedback system (17) can be regarded as a control Lyapunov function in the case of $\rho^2 I \geq 4QR$.

3.2 Stabilizing Receding Horizon Control for the 3D Eye-in/to-Hand Visual Feedback System

Suppose that the terminal cost is the control Lyapunov function $\rho V(x)$, the following theorem concerning the stability of the receding horizon control holds.

Theorem 4. Consider the cost function (21)–(23) for the visual feedback system (17). Suppose that $w = 0$, $\|\theta_{eh}\| \leq \frac{\pi}{2}$, $\|\theta_{ec}\| \leq \frac{\pi}{2}$, $\|\theta_{ee}\| \leq \frac{\pi}{2}$, and $\rho^2 I \geq 4QR$, then the receding horizon control for the visual feedback system is asymptotically stabilizing.

Proof Our goal is to prove that $J(x^*(t), u_{RH}, T)$, which is the cost-to-go applying the receding optimal control u_{RH}, will qualify as a Lyapunov function for the closed loop system. Construct the following suboptimal control strategy for the time interval $[t+\delta, t+T+\delta]$

$$\tilde{u} = \begin{cases} u^*(\tau) & \tau \in [t+\delta, t+T] \\ u_k(\tau) = -\frac{\rho}{2} R^{-1} N x & \tau \in [t+T, t+T+\delta] \end{cases} \tag{28}$$

where u_k is the stabilizing control law (19) with $K = \frac{\rho}{2} R^{-1}$ for the visual feedback system. The associated cost is

$$\begin{aligned}
&J(x^*(t+\delta), \tilde{u}, T) \\
&= J(x(t), u^*, T) + \rho[V(x(t+T+\delta)) - V(x^*(t+T))] \\
&\quad - \int_t^{t+\delta} l(x^*(\tau), u^*) d\tau + \int_{t+T}^{t+T+\delta} l(x^*(\tau+T), u_k) d\tau,
\end{aligned} \tag{29}$$

where x^* is the optimal state trajectory. This cost, which is an upper bound for $J(x^*(t+\delta), u^*, T)$, satisfies

$$\begin{aligned}
&J(x^*(t+\delta), u^*, T) - J(x^*(t), u^*, T) \\
&\leq \rho[V(x(t+T+\delta)) - V(x^*(t+T))] \\
&\quad - \int_t^{t+\delta} l(x^*(\tau), u^*) d\tau + \int_{t+T}^{t+T+\delta} l(x^*(\tau+T), u_k) d\tau.
\end{aligned} \tag{30}$$

Using the positive definite function $l(x(t), u(t))$ (22) and the stabilizing control law u_k (19) for the system, and dividing both sides by δ and taking the limit as $\delta \to 0$, Equation (30) can be transformed into

$$\begin{aligned}
&\lim_{\delta \to 0} \frac{J(x^*(t+\delta), u^*, T) - J(x^*(t), u^*, T)}{\delta} \\
&\leq -x^{*T}(t+T) \left(\frac{\rho^2}{4} R^{-1} - Q\right) x^*(t+T) \\
&\quad - x^{*T}(t) Q x^*(t) - u^{*T} R u^*.
\end{aligned} \tag{31}$$

Considering that the control input during first δ is $u_{RH} = u^*$, by the assumption $\rho^2 I \geq 4QR$, the derivative of $J(x^*(t), u_{RH}, T)$ is negative definite. Therefore, we have shown that $J(x^*(t), u_{RH}, T)$ qualifies as a Lyapunov function and asymptotic stability is guaranteed. (Q.E.D)

Theorem 4 guarantees the stability of the receding horizon control using a control Lyapunov function for the 3D eye-in/to-hand visual feedback system (17) which is a highly nonlinear and relatively fast system. Since the stabilizing receding horizon control design is based on optimal control theory, the control performance should be improved compared to the simple passivity based control u_k (19), under the condition of adequate gain assignment in the cost function. It should be noted that the error function $\phi(e^{\hat{\xi}\theta})$ of the rotation matrix can be directly used in the stage cost (22). Compared with the previous work (Murao et al. [2006]), the assumption $\rho^2 I \geq 4QR$ becomes very simply, and it is quite easy to set the value of ρ, by virtue of the fact that N becomes a block diagonal matrix in the case of the *new* dynamic visual feedback system (17). Moreover, the main advantage is that the proposed control law can be applied to not only the eye-in-hand visual feedback system but also the eye-to-hand one. This allows us to extend the technological application area.

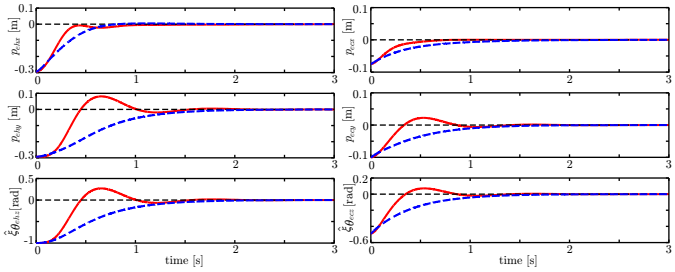

Fig. 3. Hand control error (Left) and camera one (Right). (Solid: stabilizing receding control law, Dashed: simple passivity based one)

4. SIMULATIONS

In this section, we present simulation results for the predictive visual feedback control, compared with the simple passivity based control law u_k (19). The simulation results on two 2DOF manipulators are shown in order to understand our proposed method simply, though it is valid for 3D dynamic visual feedback systems. The weights of the cost function (21)–(23) and the controller parameters for the simple passivity based control law (19) are selected in order not to exceed the limit of the input torques for the manipulators. To solve the real time optimization problem, the software C/GMRES (Ohtsuka [2004]) is utilized. The control input with the receding horizon control is updated every 1 [ms]. It must be calculated by the receding horizon controller within that period. The horizon was selected as $T = 0.02$ [s].

The simulation results are presented in Fig. 3. The hand control error e_h and the camera one e_c are shown in the left side and the right one, respectively. The solid lines denote the errors applying the proposed stabilizing receding horizon control, and the dashed lines denote those for the passivity based control law u_k (19). In Fig. 3, the asymptotic stability can be confirmed by steady state performance. Moreover, the rise time applying the receding horizon control is shorter than that for the passivity based control.

The performance for parameter value T and ρ is compared in terms of the integral cost in Table 1. Since the cost of the stabilizing receding horizon method is smaller than the passivity based control method under conditions of the adequate cost function, it can be easily verified that the control performance is improved. With increasing weight of the terminal cost from $\rho = 1$ to $\rho = 1.5$ the cost increases, too. With higher terminal cost the state value is reduced more strictly, using a large control input. As the horizon length increases from $T = 0.005$ to $T = 0.04$, the cost is reduced. In the case of $T = 0.1$, the calculation cannot be completed within one sampling interval, due to limited computing power.

5. CONCLUSIONS

This paper proposes a stabilizing receding horizon control for a reconstructed 3D eye-in/to-hand visual feedback system, which is a highly nonlinear and relatively fast system, as a predictive visual feedback control. The dynamic visual feedback system is reconstructed in order to improve the performance of the estimation. It is shown that the stability of the receding horizon control scheme is guaranteed by using the terminal cost derived from the energy function of the visual feedback system. Simulation results are presented to verify the control performance of the stabilizing receding horizon control law.

Table 1. Values of the integral cost.

Control Scheme	cost
Passivity based Control	8014
Receding Horizon Control ($T = 0.02$ [s], $\rho = 1$)	701
Receding Horizon Control ($T = 0.02$ [s], $\rho = 1.2$)	878
Receding Horizon Control ($T = 0.02$ [s], $\rho = 1.5$)	1194
Receding Horizon Control ($T = 0.005$ [s], $\rho = 1$)	710
Receding Horizon Control ($T = 0.04$ [s], $\rho = 1$)	691

REFERENCES

F. Chaumette and S. Hutchinson. Visual Servo Control, Part I: Basic Approaches. *IEEE Robotics & Automation Magazine*, 13:82–90, 2006.

F. Chaumette and S. Hutchinson. Visual Servo Control, Part II: Advanced Approaches. *IEEE Robotics & Automation Magazine*, 14:109–117, 2007.

G. Flandin, F. Chaumette and E. Marchan. Eye-in-Hand/Eye-to-Hand Cooperation for Visual Servoing. *Proc. of the 2000 IEEE International Conference on Robotics and Automation*, pages 2741–2746, Apr. 2000.

M. Fujita, H. Kawai and M. W. Spong. Passivity-based Dynamic Visual Feedback Control for Three Dimensional Target Tracking: Stability and L_2-gain Performance Analysis. *IEEE Trans. Control Systems Technology*, 15:40–52, 2007.

A.E. Hunt and A.C. Sanderson. Vision-based Predictive Robotic Tracking of a Moving Target. *Technical Report*, Carnegie Mellon University, 1982.

A. Jadbabaie, J. Yu and J. Hauser. Unconstrained Receding-Horizon Control of Nonlinear Systems. *IEEE Trans. Automatic Control*, 46:776–783, 2001.

V. Lippiello, B. Siciliano and L. Villani. Position-based Visual Servoing in Industrial Multirobot Cells using a Hybrid Camera Configuration. *IEEE Trans. Robotics*, 23:73–86, 2007.

D.Q. Mayne, J.B. Rawlings, C.V. Rao and P.O.M. Scokaert. Constrained Model Predictive Control: Stability and Optimality. *Automatica*, 36:789–814, 2000.

M.B. Milam, R. Franz, J.E. Hauser and R.M. Murray. Receding Horizon Control of Vectored Thrust Flight Experiment. *IEE Proc. Control Theory & Applications*, 152:340–348, 2005.

T. Murao, H. Kawai and M. Fujita. Passivity-based Control of Visual Feedback Systems with Dynamic Movable Camera Configuration. *Proc. of the 44th IEEE Conference on Decision and Control and European Control Conference*, pages 5360–5365, Dec. 2005.

T. Murao, T. Yamada and M. Fujita. Predictive Visual Feedback Control with Eye-in-Hand System via Stabilizing Receding Horizon Approach. *Proc. of the 45th IEEE Conference on Decision and Control*, pages 1758–1763, Dec. 2006.

R. Murray, Z. Li and S. S. Sastry. *A Mathematical Introduction to Robotic Manipulation*, CRC Press, 1994.

T. Ohtsuka. A Continuation/GMRES Method for Fast Computation of Nonlinear Receding Horizon Control. *Automatica*, 40:563–574, 2004.